DUAL DIFFERENTIAL COMPARATOR

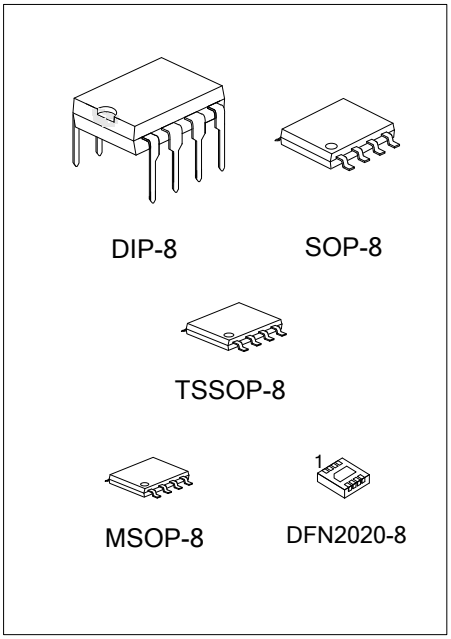

■ DESCRIPTION

The UTC **LM393** consists of two independent voltage comparators, designed specifically to operate from a single power supply over a wide voltage range.

■ FEATURES

* Single or dual supply operation.
* Wide operating supply range
  (V_{CC}=2V ~ 36V or ±1 ~ ±18V)
* Input common-mode voltage includes ground.
* Low supply current drain I_{CC}=0.8mA (Typical).
* Low input bias current I_{BIAS}=25nA (Typical).
* Output compatible with TTL, DTL, and CMOS logic system.

■ ORDERING INFORMATION

Ordering Number		Package	Packing
Lead Free	Halogen-Free		
LM393L-D08-T	LM393G-D08-T	DIP-8	Tube
LM393L-S08-R	LM393G-S08-R	SOP-8	Tape Reel
LM393L-P08-R	LM393G-P08-R	TSSOP-8	Tape Reel
LM393L-SM1-R	LM393G-SM1-R	MSOP-8	Tape Reel
LM393L-K08-2020-R	LM393G-K08-2020-R	DFN2020-8	Tape Reel

LM393G-D08-T (1) Packing Type (2) Package Type (3) Green Package	(1) T: Tube, R: Tape Reel (2) D08: DIP-8, S08: SOP-8, P08: TSSOP-8, SM1: MSOP-8, K08-2020: DFN2020-8 (3) G: Halogen Free and Lead Free, L: Lead Free

Copyright © 2020 Unisonic Technologies Co., Ltd

■ MARKING

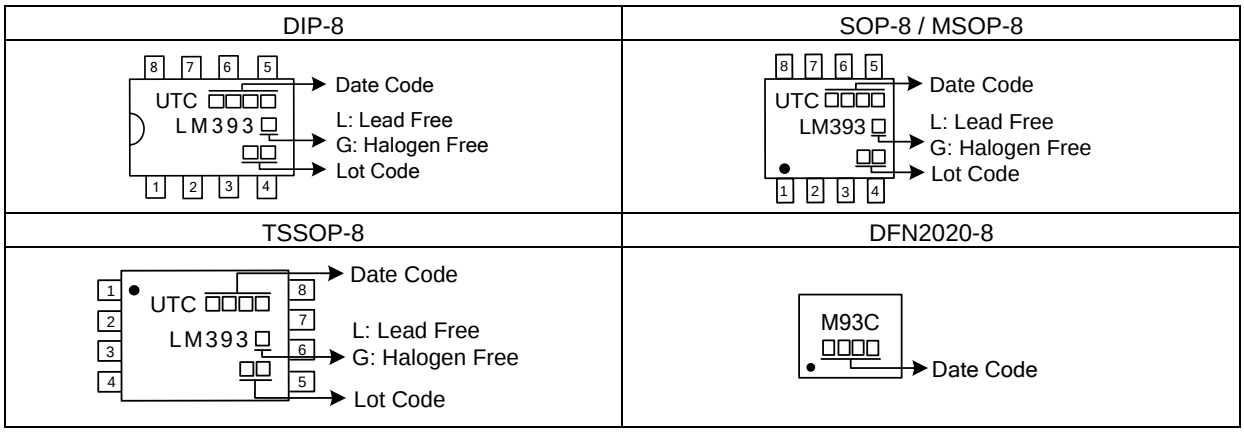

■ PIN DESCRIPTION

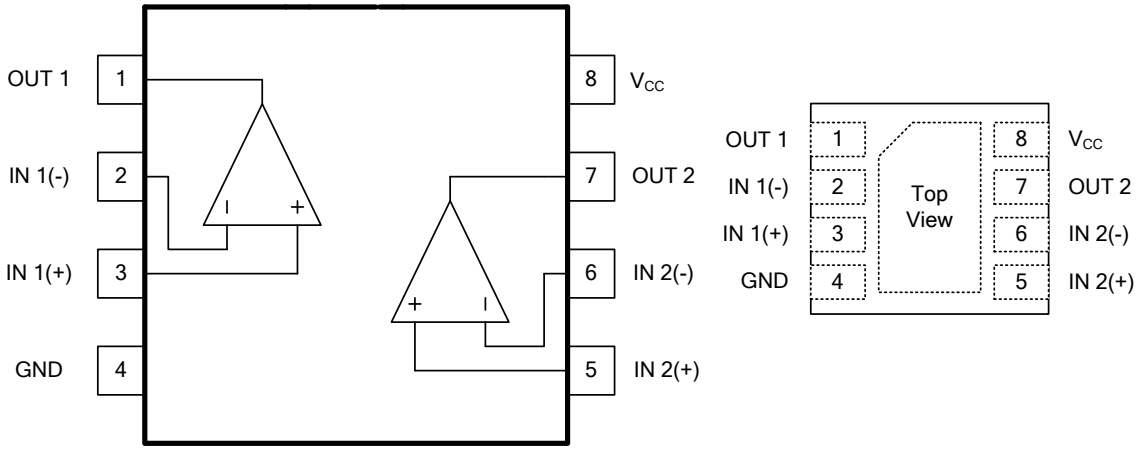

DIP-8 / SOP-8 / MSOP-8 / TSSOP-8 DFN2020-8

■ BLOCK DIAGRAM

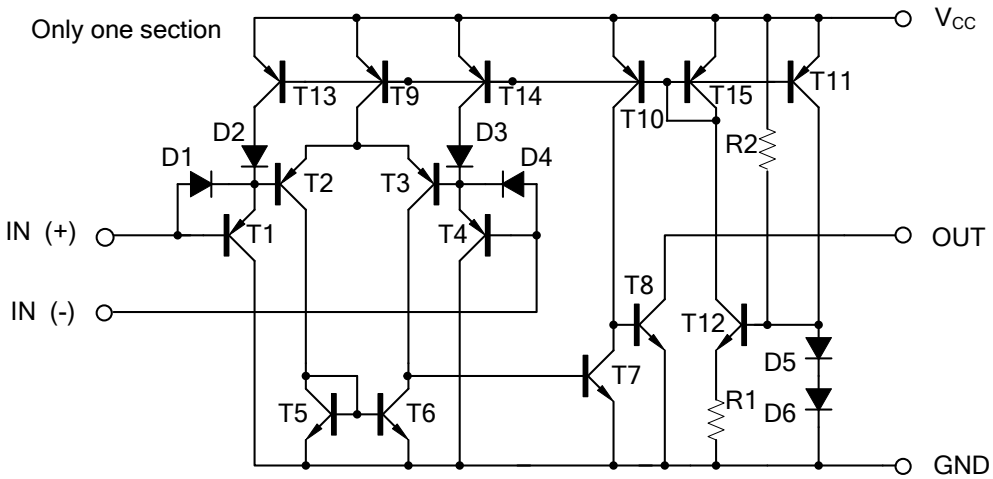

■ ABSOLUTE MAXIMUM RATINGS (T_A = 25°C, unless otherwise specified)

PARAMETER		SYMBOL	RATINGS	UNIT
Supply Voltage		V_{CC}	±18 or 36	V
Differential Input Voltage		$V_{I(DIFF)}$	±36	V
Input Voltage		V_{IN}	-0.3 ~ +36	V
Power Dissipation (T_A=25°C)	DIP-8	P_D	780	mW
	SOP-8		420	mW
	TSSOP-8		350	mW
	MSOP-8		300	mW
	DFN2020-8		830	mW
Operating Temperature Range (Note 2)		T_{OPR}	-40 ~ +125	°C
Storage Temperature Range		T_{STG}	-65 ~ +150	°C

Notes: 1. Absolute maximum ratings are those values beyond which the device could be permanently damaged. Absolute maximum ratings are stress ratings only and functional device operation is not implied.
2. It is guarantee by design, not 100% be tested.

■ ELECTRICAL CHARACTERISTICS

(V_{CC}=5.0V, T_A=25°C, All voltage referenced to GND unless otherwise specified)

PARAMETER	SYMBOL	TEST CONDITIONS		MIN	TYP	MAX	UNIT
Input Offset Voltage	$V_{I(OFF)}$	V_{CM}=0V toV_{CC}-1.5V $V_{O(P)}$=1.4V, R_S=0Ω			1.0	5.0	mV
Output Saturation Voltage	V_{SAT}	V_I(-)>1V, V_I(+)=0V, I_{SINK}=4mA			160	400	mV
Input Common Mode Voltage	$V_{I(CM)}$	V_{CC}=30V		0		V_{CC}-1.5	V
Large Signal Voltage Gain	G_V	V_{CC}=15V, R_L≧15KΩ		50	200		V/mV
Power Supply Current	I_{CC}	R_L=∝, V_{CC}=30V			0.8	2.5	mA
		R_L=∝			0.6	1.0	mA
Input Offset Current	$I_{I(OFF)}$				5	50	nA
Input Bias Current	$I_{I(BIAS)}$				65	250	nA
Output Sink Current	$I_{O(SINK)}$	V_I(-)>1V, V_I(+)=0V, Vo(p)<1.5V		6	18		mA
Output Leakage Current	$I_{O(LEAK)}$	V_I(+)=1V, V_I(-)=0	Vo(p)= 5V		0.1		nA
			Vo(p)=30V			1.0	μA
Large Signal Response Time	t_R	V_{IN}=TTL logic wing V_{REF}=1.4V, V_{RL}=5V, R_L=5.1kΩ			350		ns
Response Time	t_R	V_{RL}=5V,R_L=5.1kΩ			1400		ns

■ TYPICAL CHARACTERISTICS

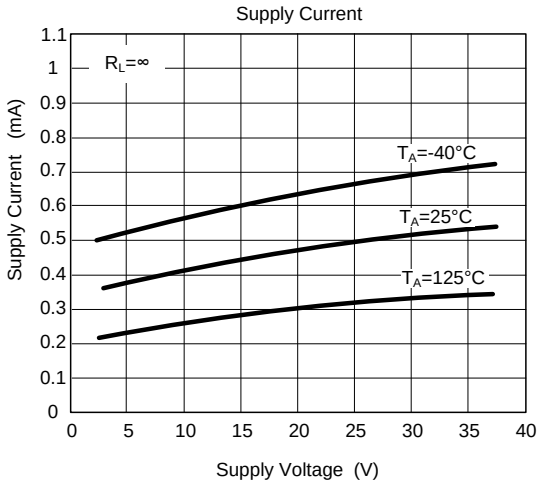

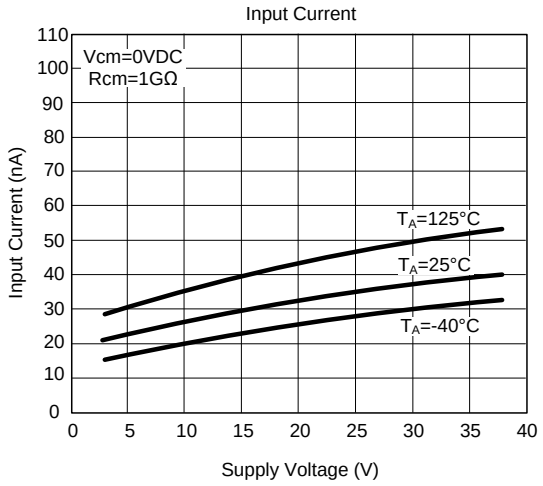

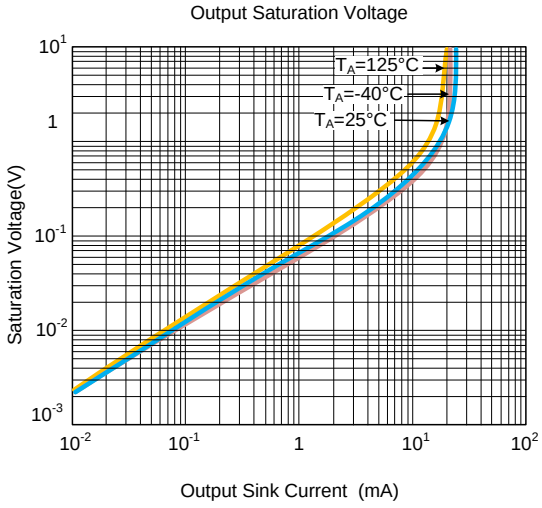

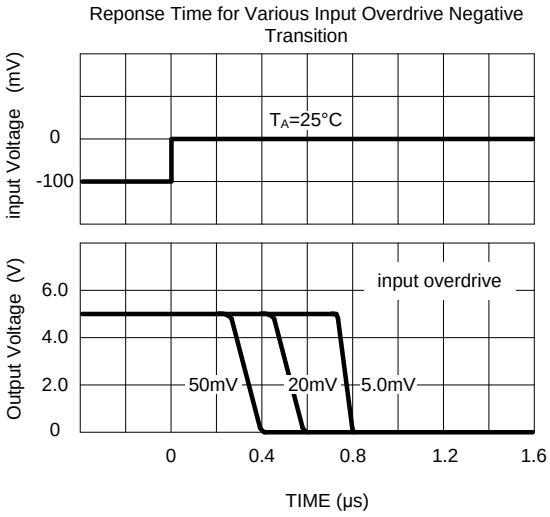

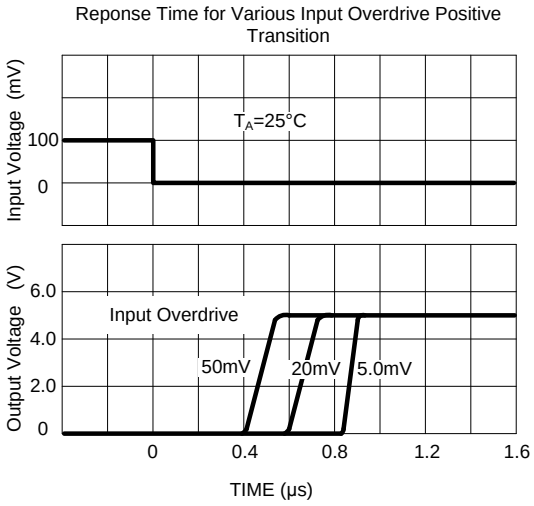

UTC assumes no responsibility for equipment failures that result from using products at values that exceed, even momentarily, rated values (such as maximum ratings, operating condition ranges, or other parameters) listed in products specifications of any and all UTC products described or contained herein. UTC products are not designed for use in life support appliances, devices or systems where malfunction of these products can be reasonably expected to result in personal injury. Reproduction in whole or in part is prohibited without the prior written consent of the copyright owner. UTC reserves the right to make changes to information published in this document, including without limitation specifications and product descriptions, at any time and without notice. This document supersedes and replaces all information supplied prior to the publication hereof.